FLUSSO
LUXURY PLUMBING FIXTURES

Installation Manual For 145.2001

8” Widespread Lavatory Faucet

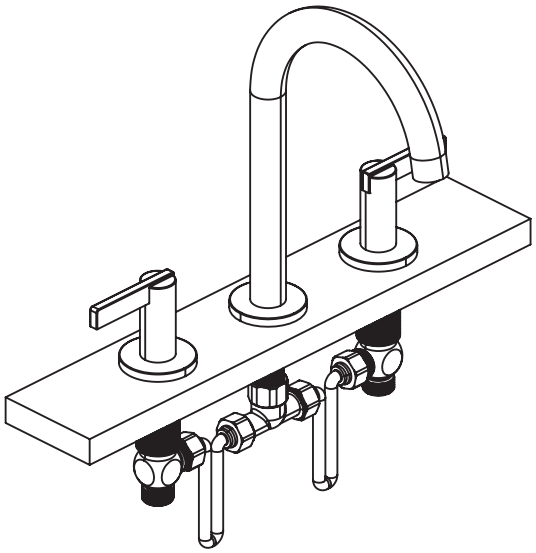

NOTICE TO HOMEOWNER

- We recommend that this product is installed by a qualified professional plumber.
- Please check this product immediately to ensure that it has not been damaged and is complete. Before installation, please make sure this product is the correct model and you have all the parts required for installation and use.
- Please flush the water system to ensure that no metal swarf, solder, and other imputities can enter the product.
- Turn off water supply before commencing work.
- Please read these instructions carefully and retain for future reference.

BEFORE YOU BEGIN

- You must observe all local plumbing laws and codes.
- Do not instal valve if it does not meet local plumbing codes.
- Shut off the main water supply.

Installation Manual For 145.2001

8” Widespread Lavatory Faucet

TABLE OF CONTENTS

OPERATING SPECIFICATIONS 3
INSTALLING THE HOT & COLD HANDLES 4
INSTALLING THE TUB SPOUT 6
INSTALLING THE HOSES 7

OPERATING SPECIFICATIONS

WATER TEMPERATURE	WATER PRESSURE
This product is to be used with water at a temperature range of 40°F - 120°F ONLY!	This product is to be used with a water pressure range of 15 PSI to 80 PSI ONLY If water pressure is greater than 80 PSI, install a pressure reducer valve (PRV)

This valve meets or exceeds ANSI A112.18.1 and ASSE 1016

INSTALLING THE HOT & COLD HANDLES

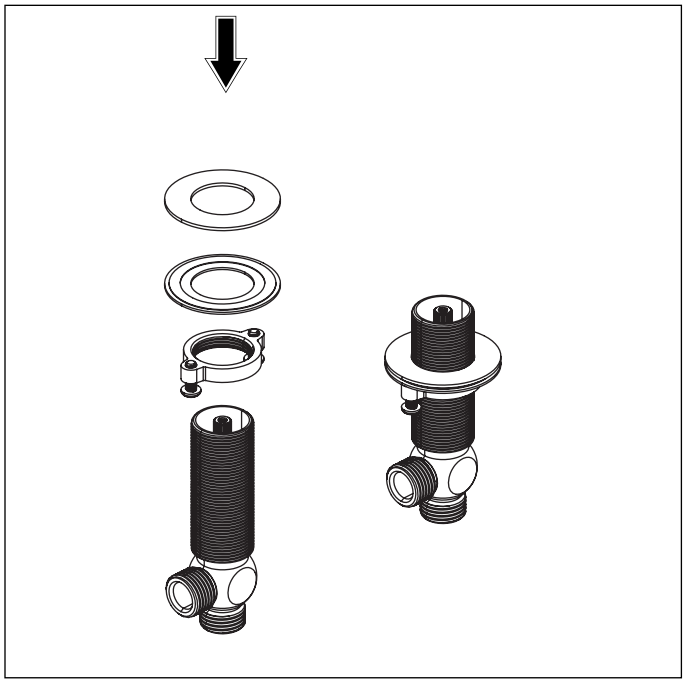

Install nut and washers onto valve

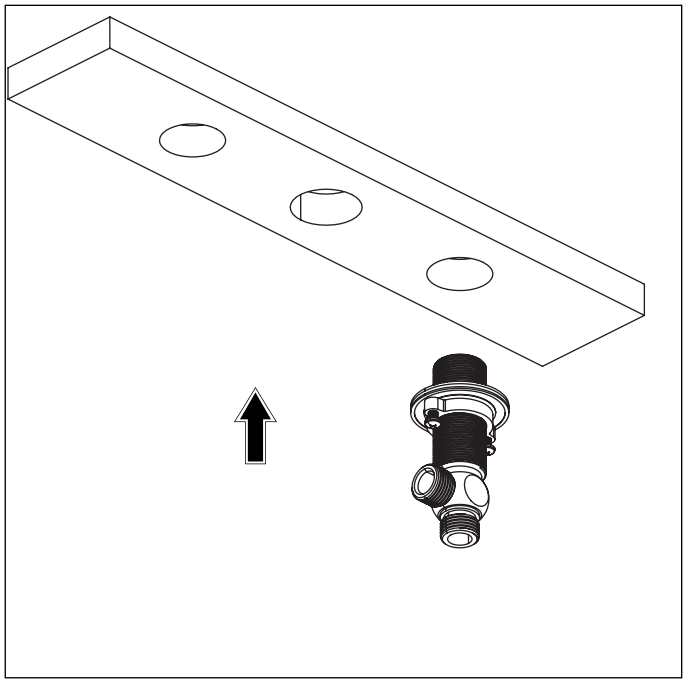

Insert valve into 1.20″ hole from below the deck

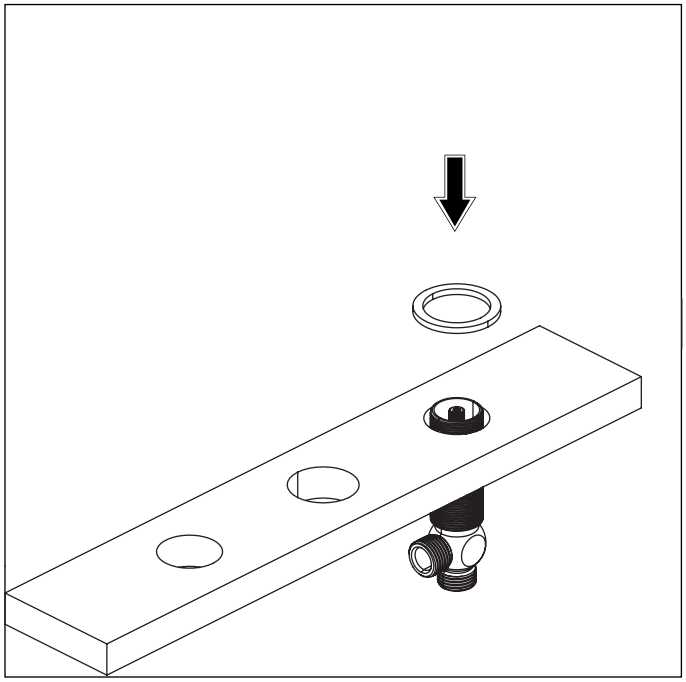

Install trim ring and twist to tighten

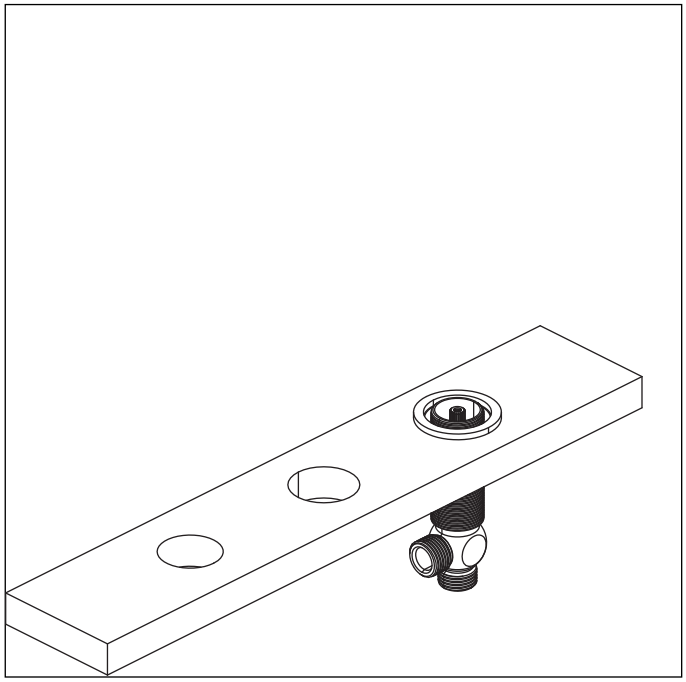

Ver. 2.53

INSTALLING THE HOT & COLD HANDLES

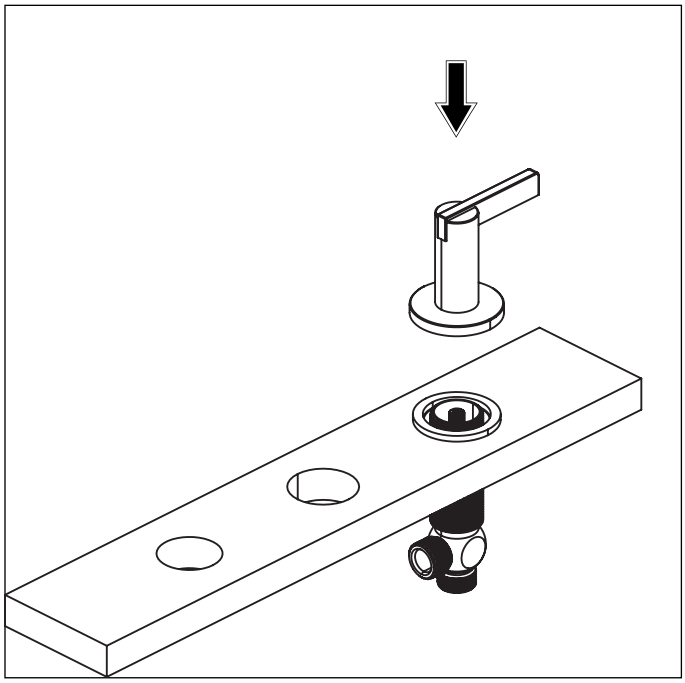

Install handle

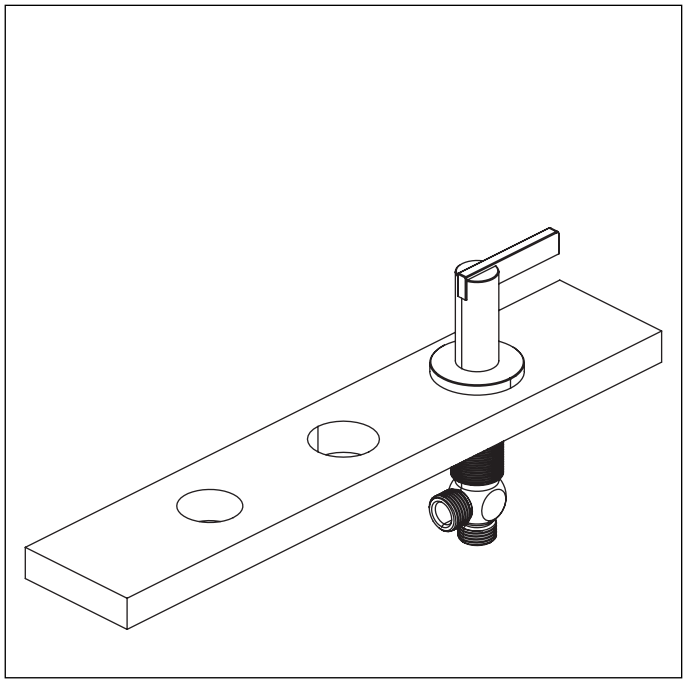

Twist to verify smooth operation

INSTALLING THE TUB SPOUT

The spout is seen above

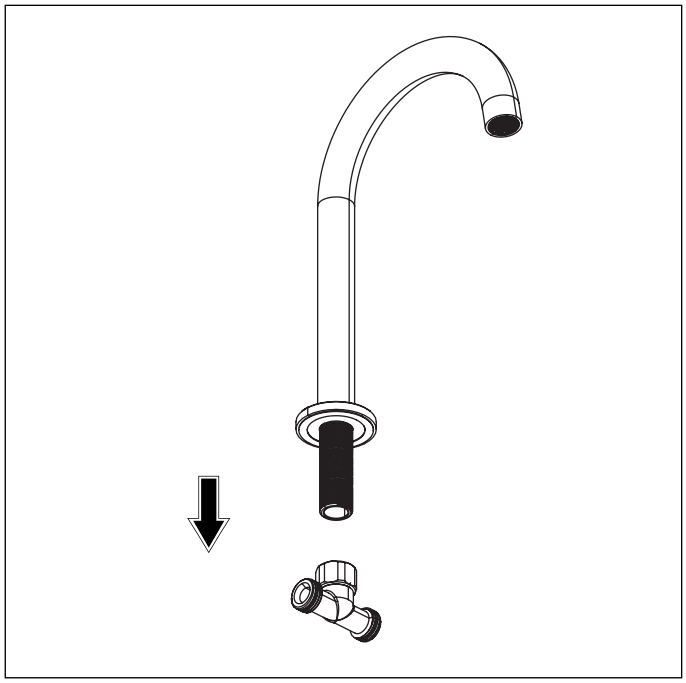

Remove T-fitting

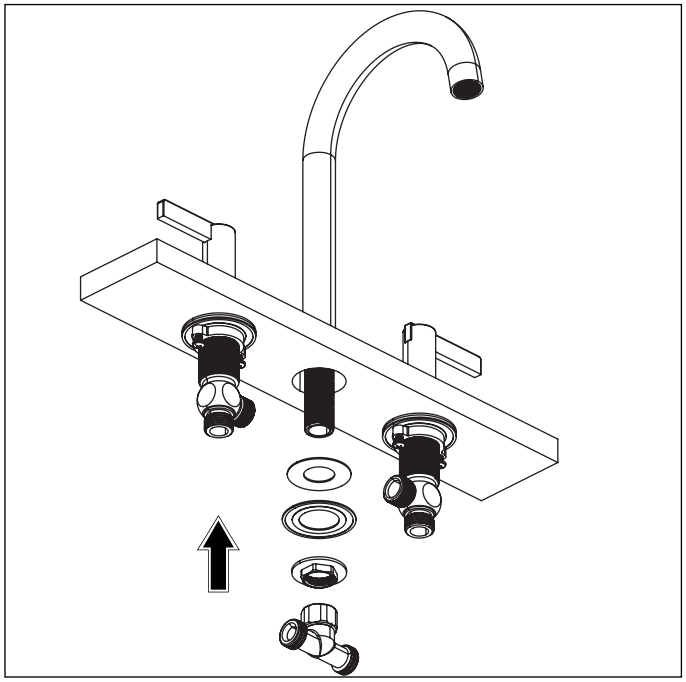

Insert spout into deck hole, then insert washers and tighten retaining nut & T-fitting

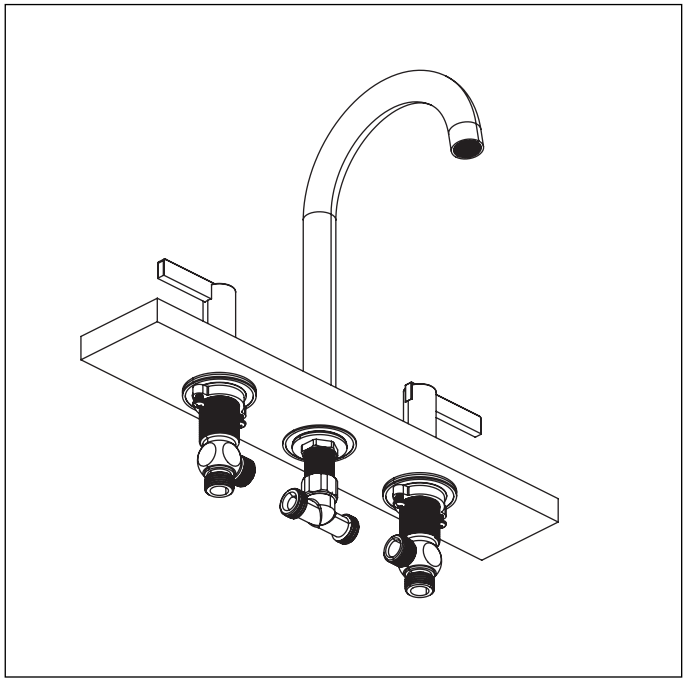

Ver. 2.53

INSTALLING THE HOSES

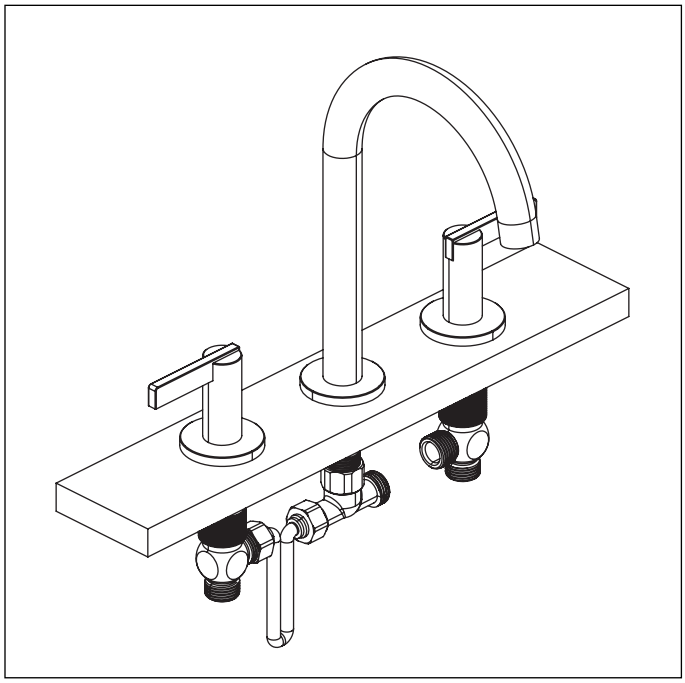

Connect Hot-side connection

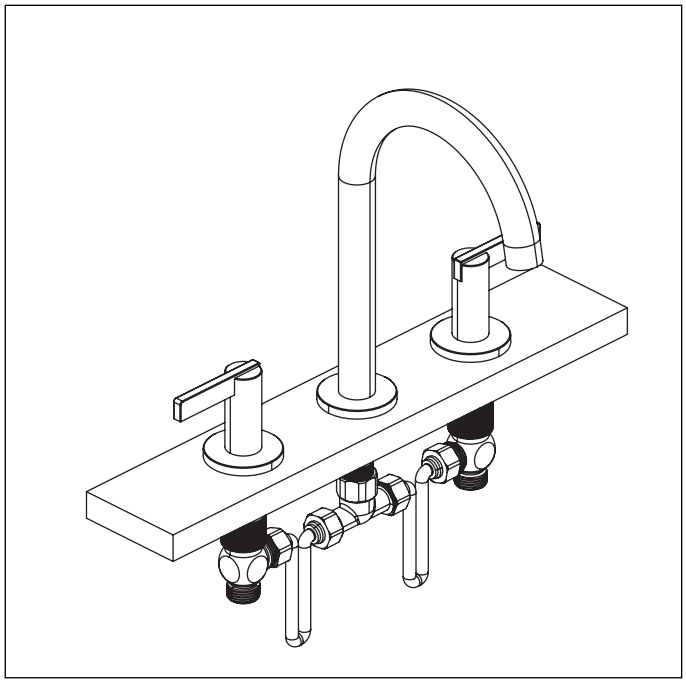

Connect Cold-side connection