260.1008- Brass Towel Ring - 8" Mini Towel Bar
Installation Manual

FLUSSO
LUXURY PLUMBING FIXTURES

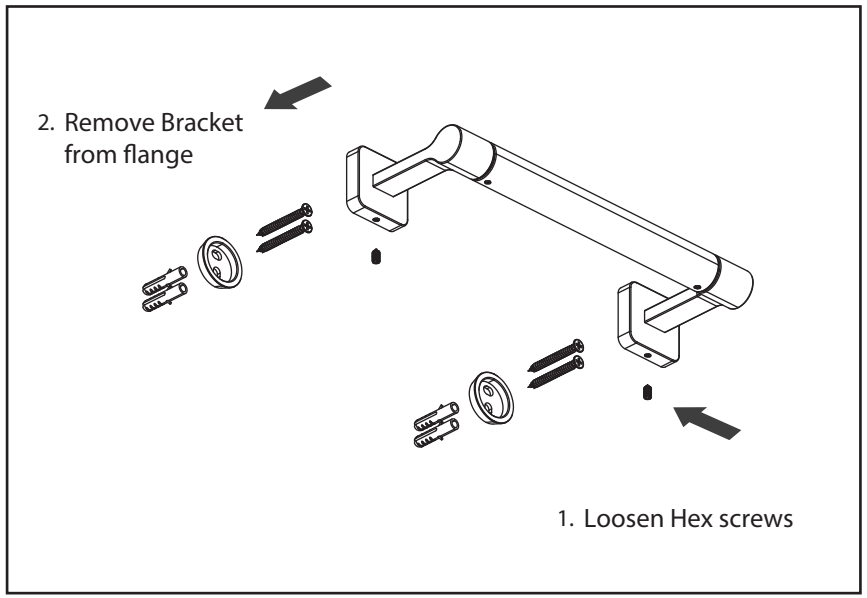

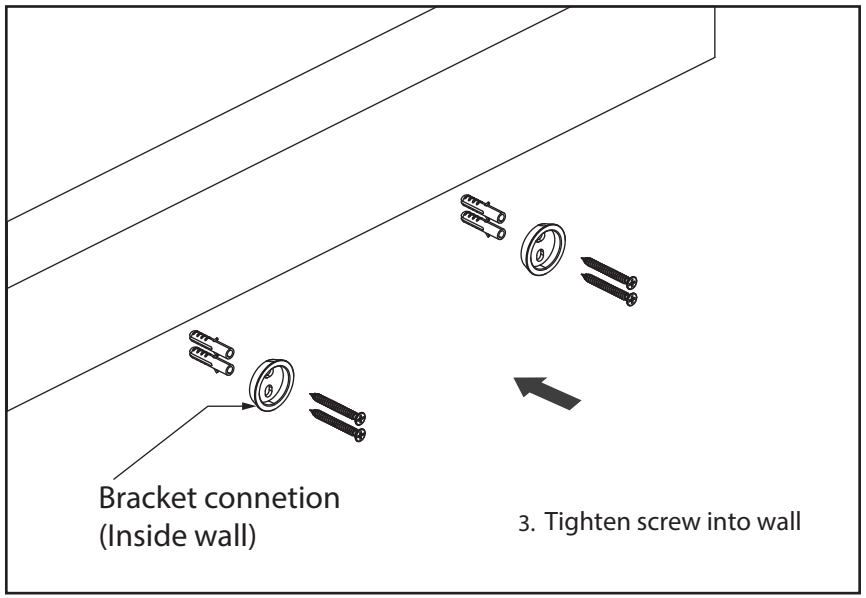

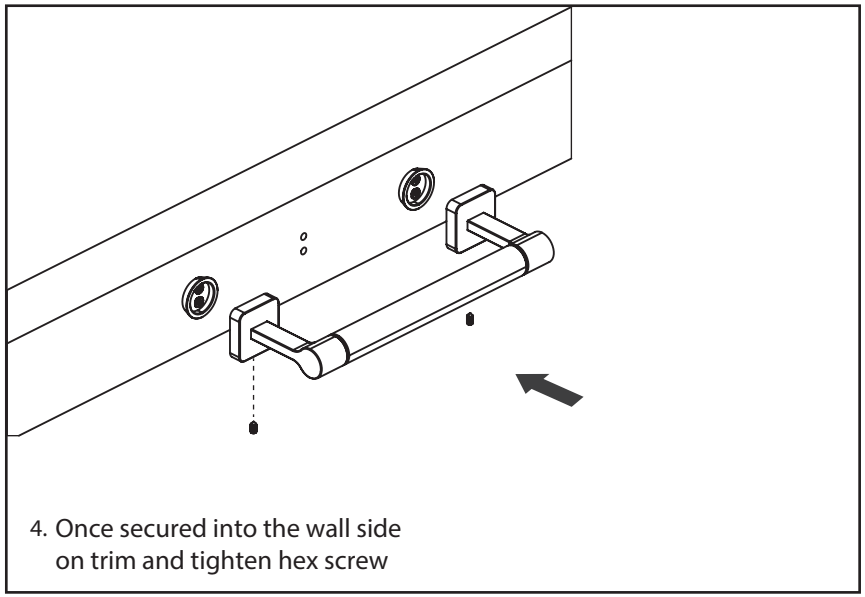

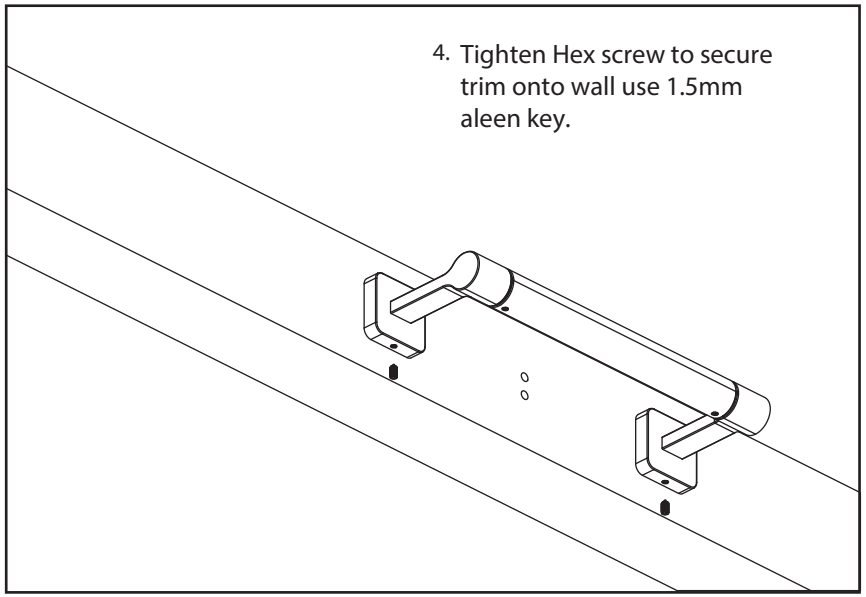

Ver 2.53