Product Parts Breakdown

▲ Specify Finish

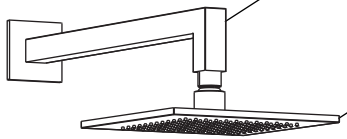

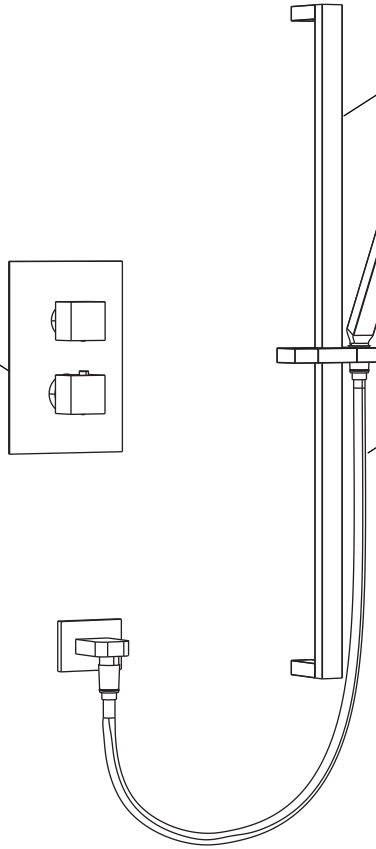

Model No. 160.7100 **Ver** 2.53

FLUSSO
LUXURY PLUMBING FIXTURES

Product Parts Breakdown

▲ Specify Finish

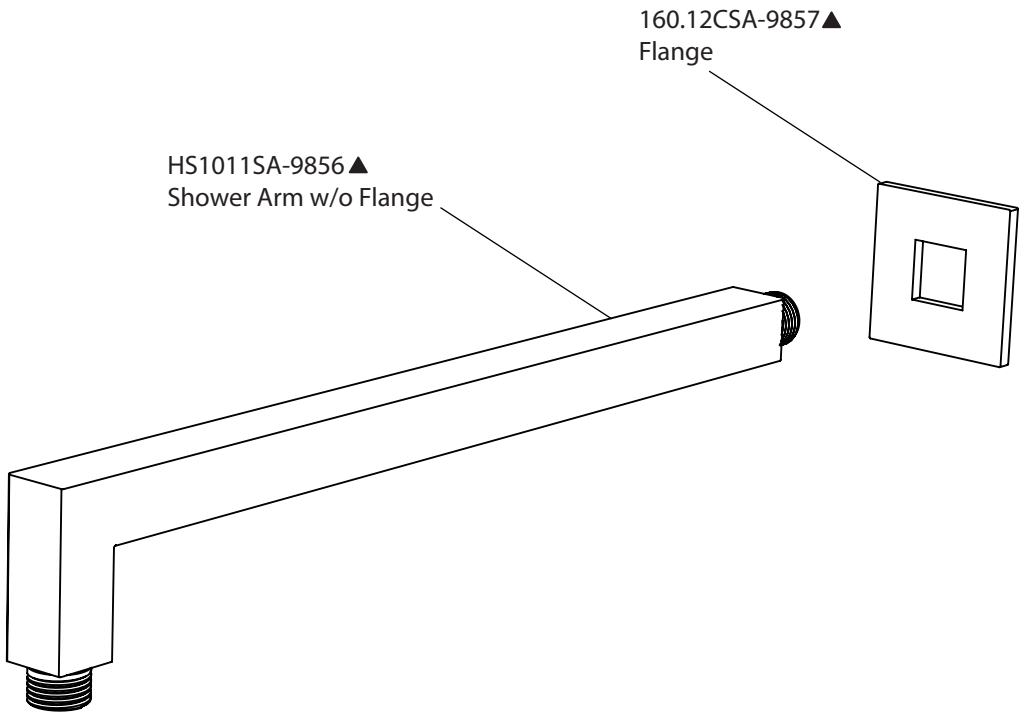

Model No. HS1011SA **Ver** 2.53

FLUSSO
LUXURY PLUMBING FIXTURES

Product Parts Breakdown

▲ Specify Finish

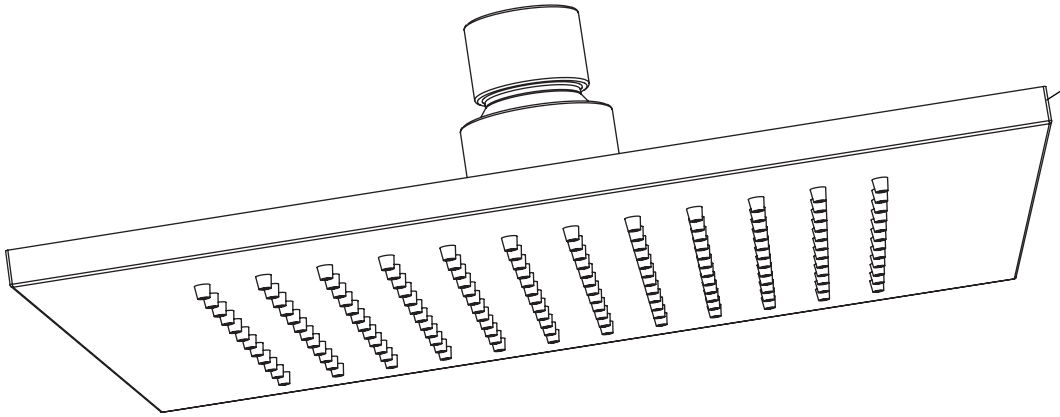

Model No. HS1001A **Ver** 2.53

FLUSSO
LUXURY PLUMBING FIXTURES

▲ Specify Finish

Product Parts Breakdown

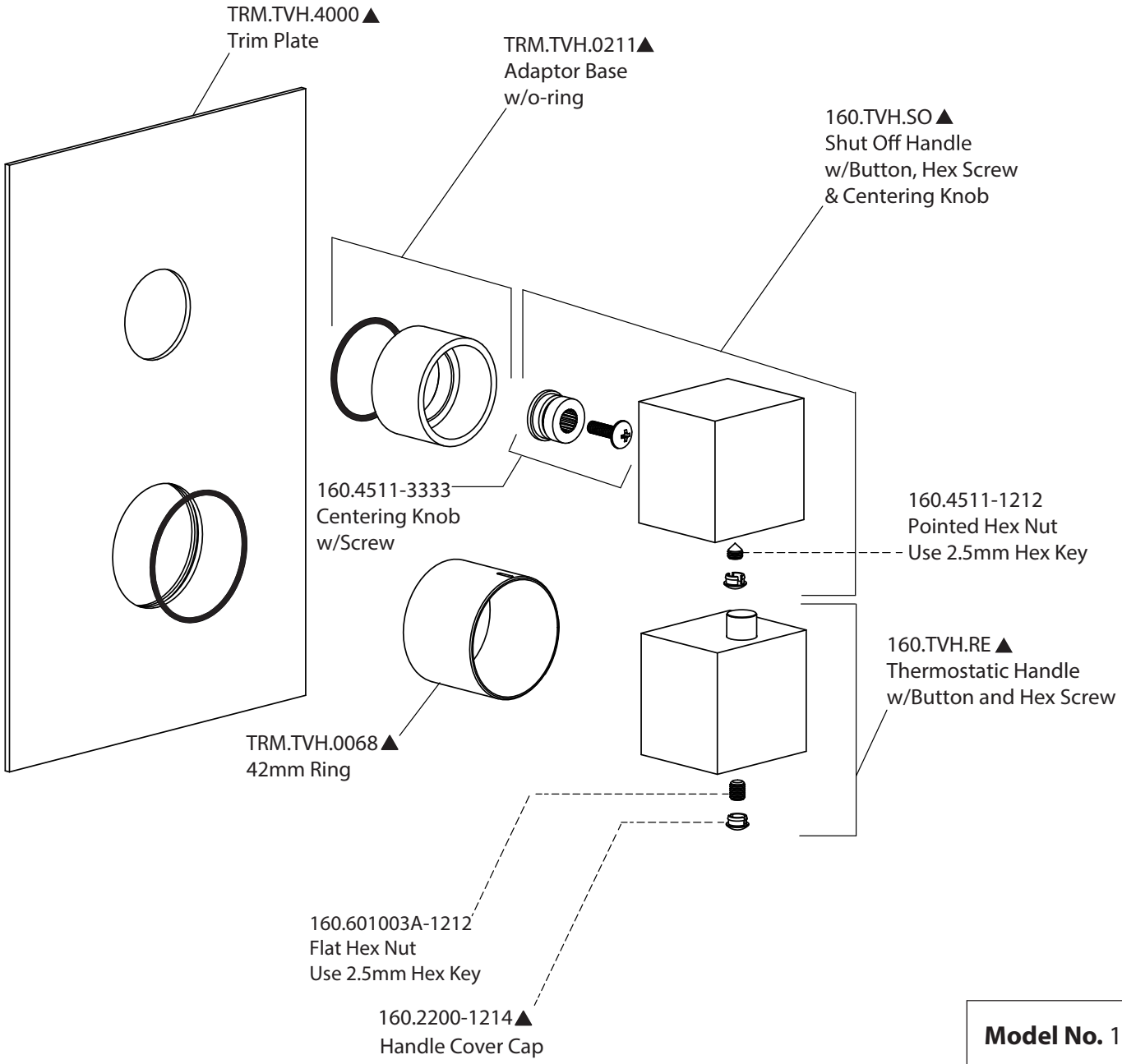

Model No. 160.4000T **Ver** 2.53

FLUSSO
LUXURY PLUMBING FIXTURES

Product Parts Breakdown

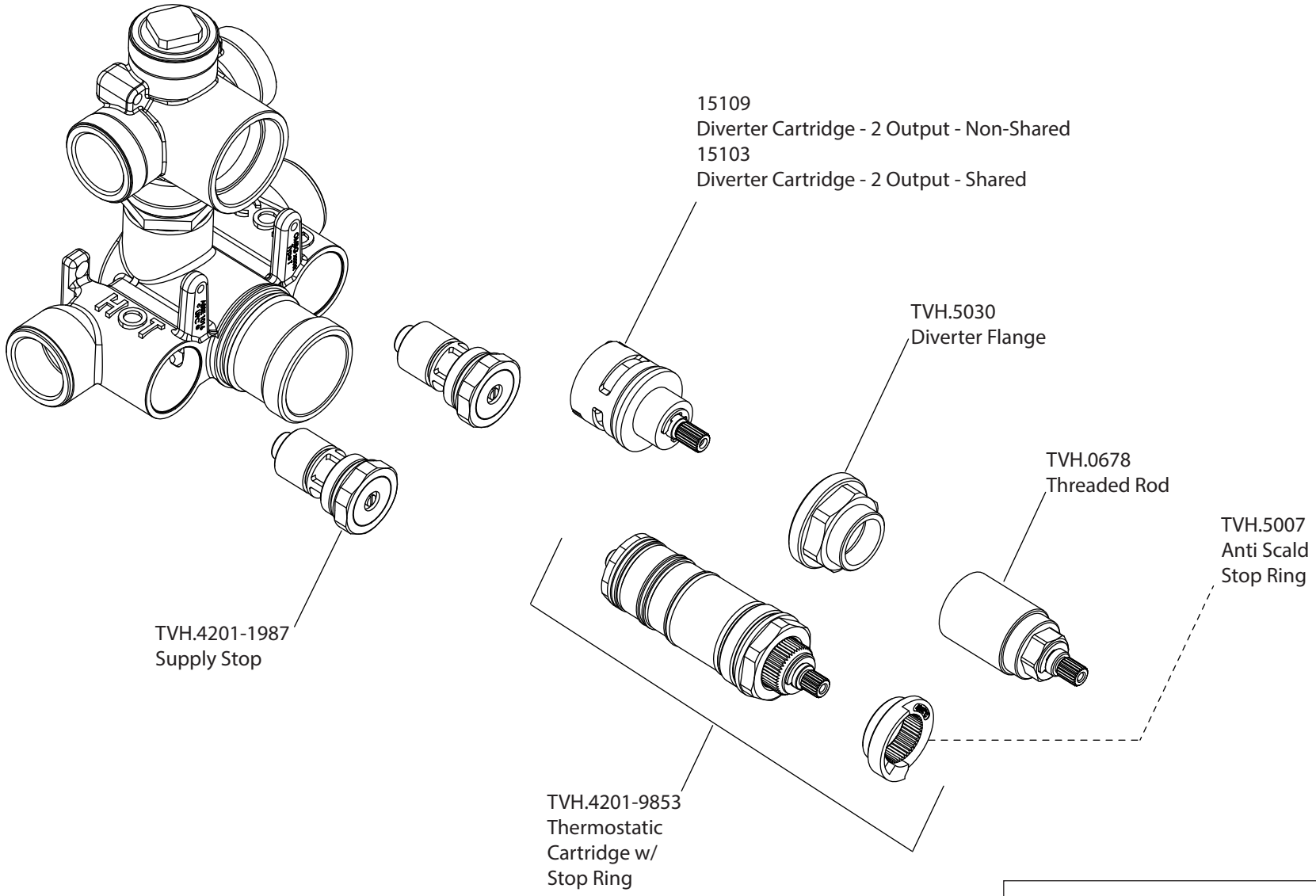

Model No. TVH.4420F **Ver** 2.54

FLUSSO
LUXURY PLUMBING FIXTURES

Product Parts Breakdown

▲ Specify Finish

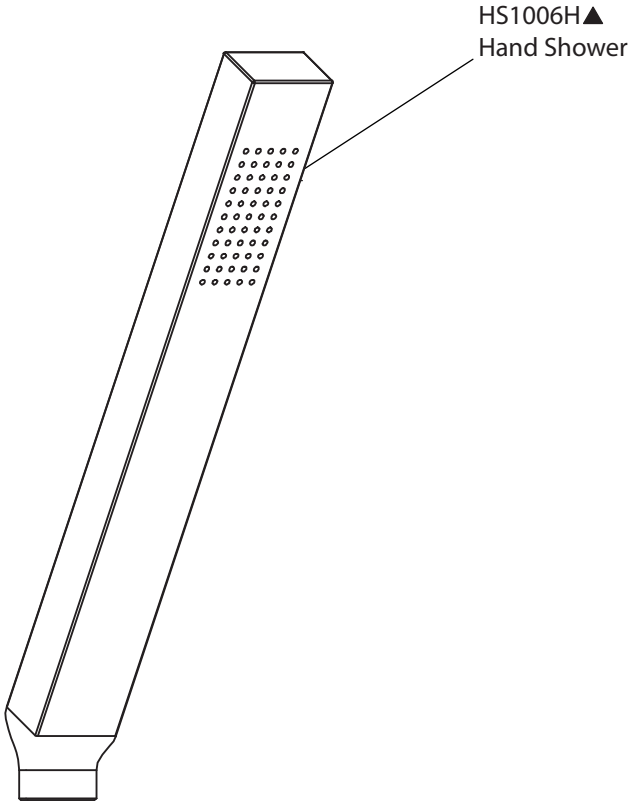

Model No. HS1006H **Ver** 2.55

FLUSSO
LUXURY PLUMBING FIXTURES

▲ Specify Finish

Product Parts Breakdown

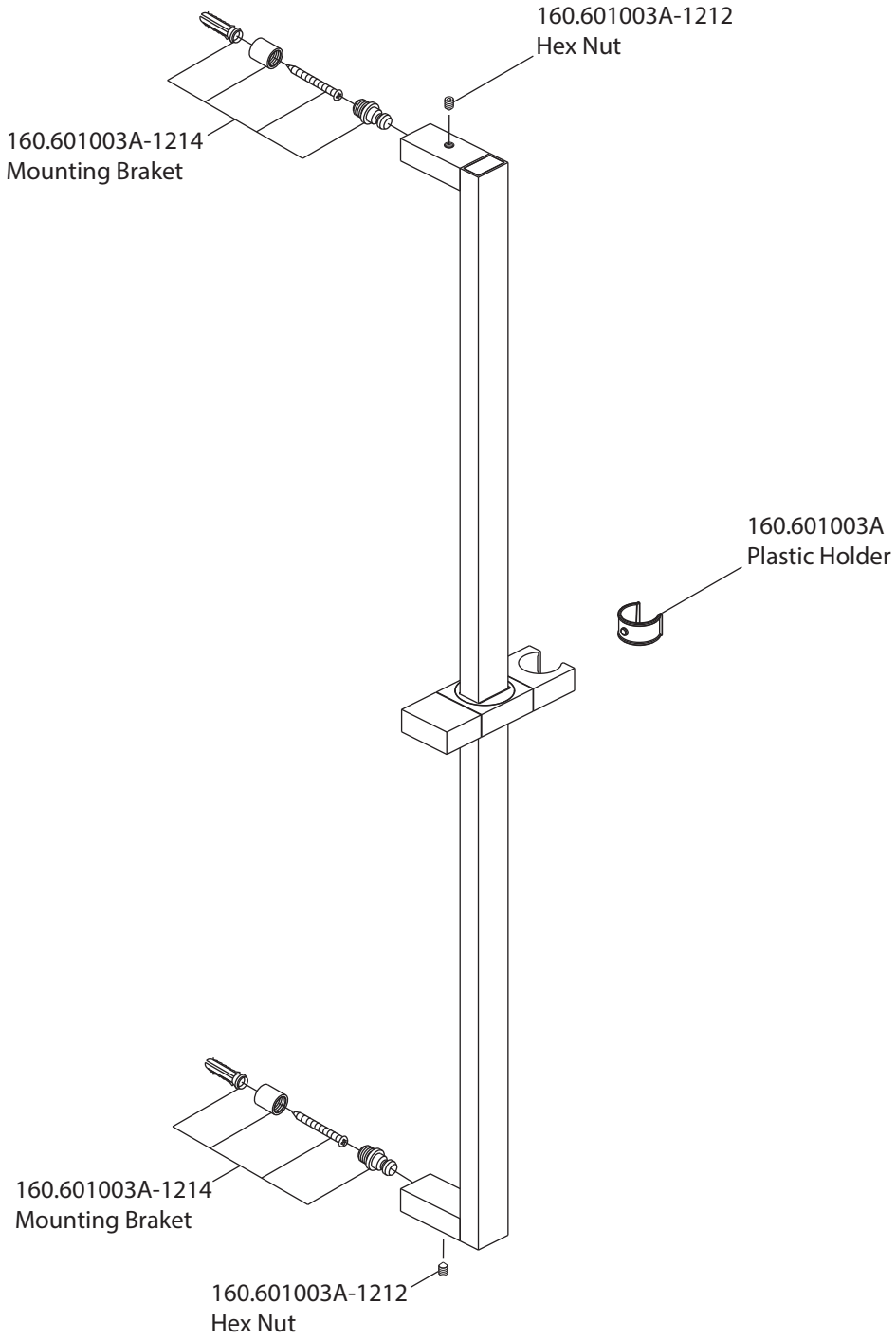

Model No. 160.601003A **Ver** 2.54

FLUSSO
LUXURY PLUMBING FIXTURES

Product Parts Breakdown

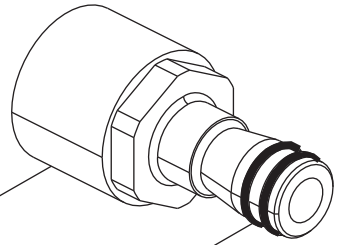

FEM.5505
1/2" female connector
with install adjustment
and o-rings

MEM.2300-O
O-rings (Set Of 2)

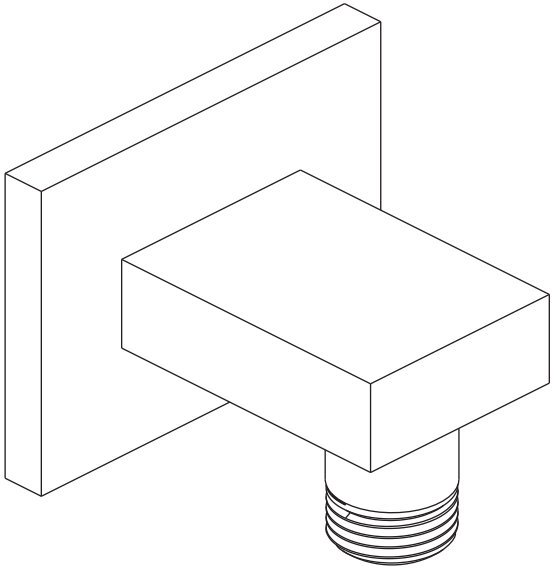

HEX.101
Pointed Hex
Screw

Model No. 160.5505 **Ver** 2.53

FLUSSO
LUXURY PLUMBING FIXTURES

Product Parts Breakdown

▲ Specify Finish

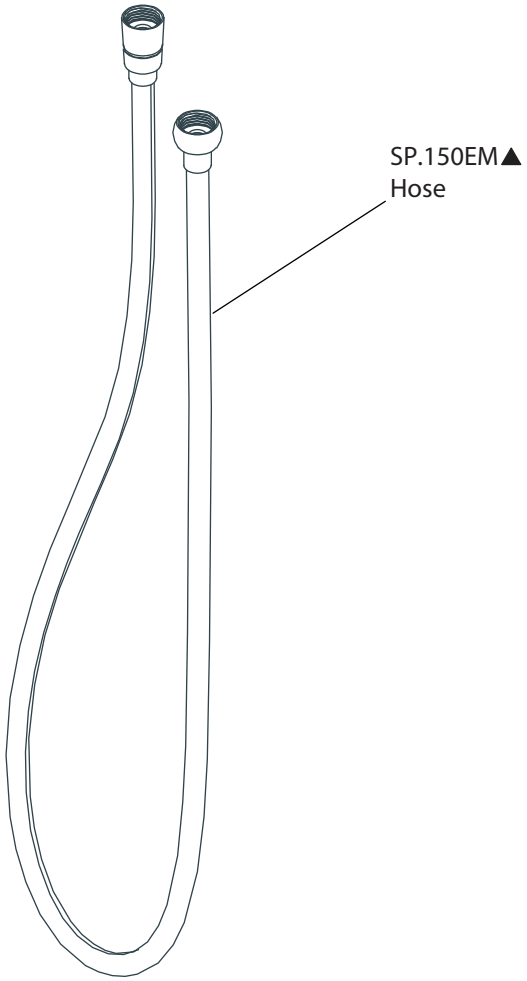

Model No. SP.150EM **Ver** 2.55

FLUSSO
LUXURY PLUMBING FIXTURES