Product Parts Breakdown

▲ Specify Finish

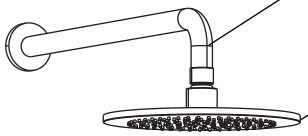

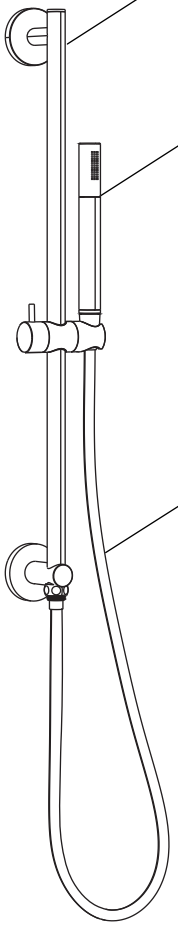

Model No. 250.7125 **Ver** 2.53

FLUSSO
LUXURY PLUMBING FIXTURES

Product Parts Breakdown

▲ Specify Finish

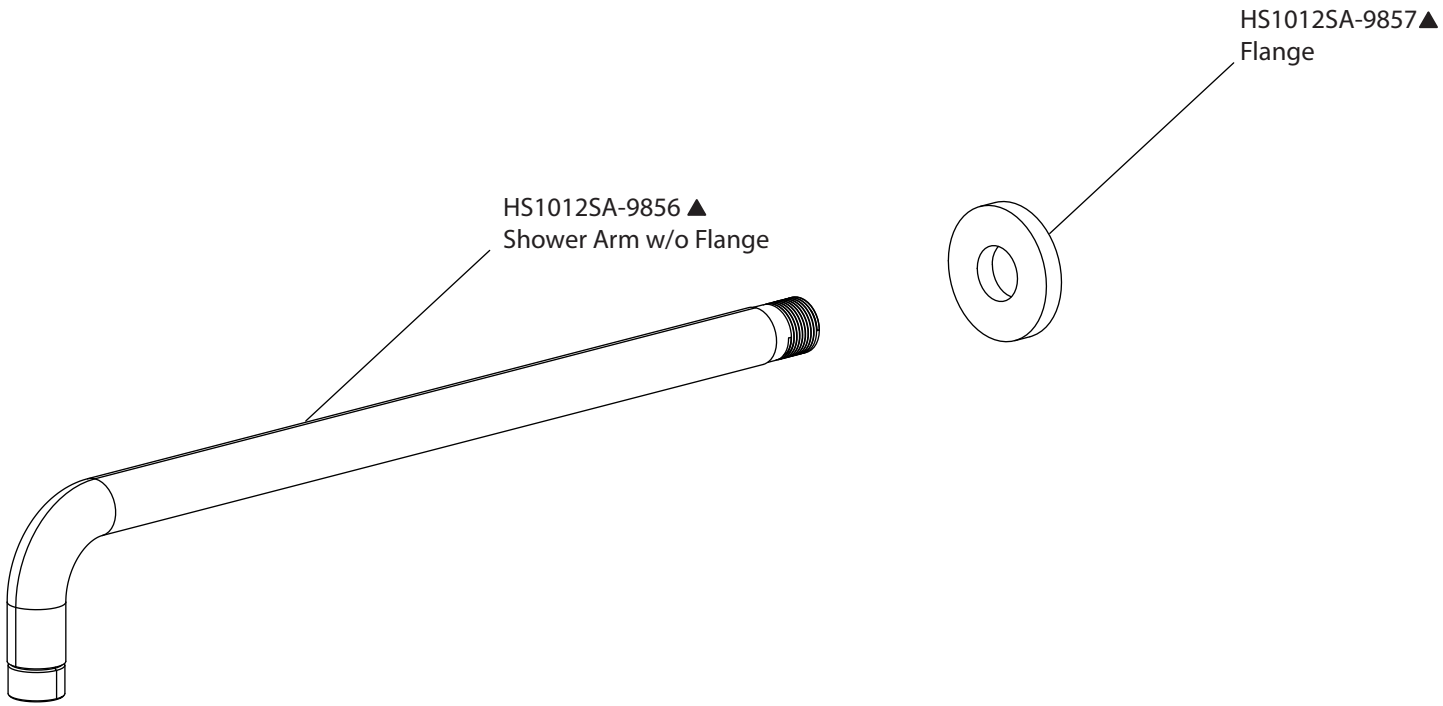

Model No. HS1012SA **Ver** 2.53

FLUSSO
LUXURY PLUMBING FIXTURES

Product Parts Breakdown

▲ Specify Finish

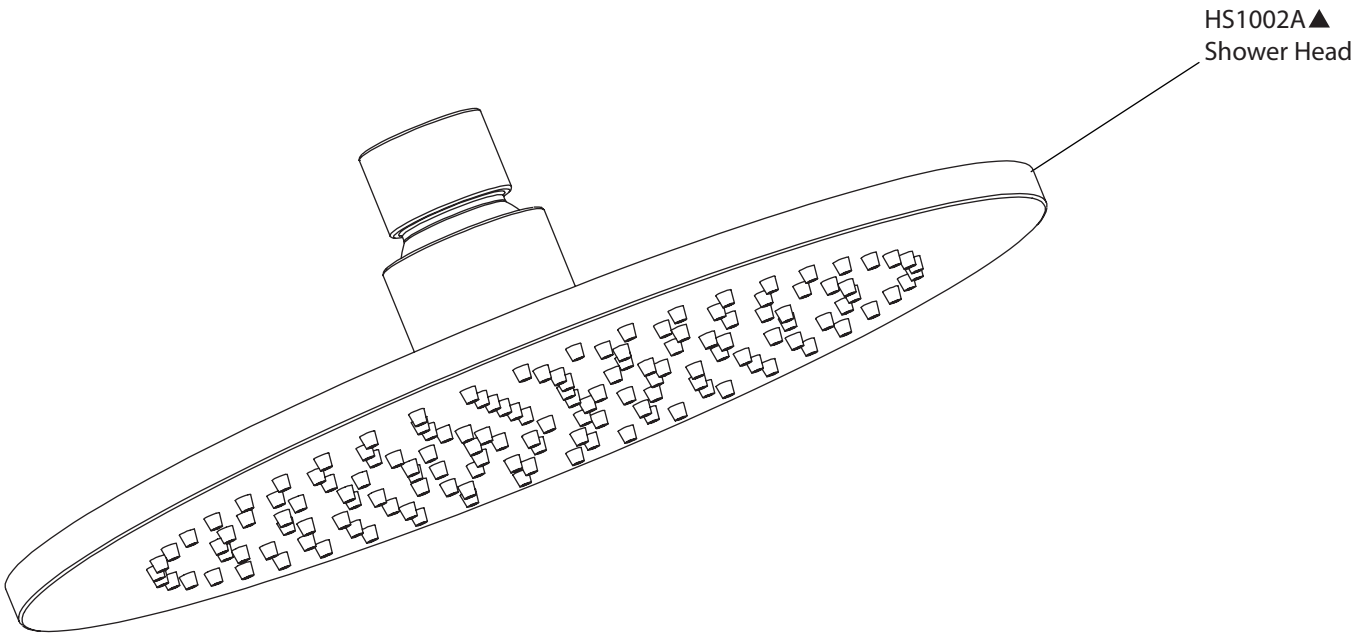

Model No. HS1002A **Ver** 2.53

FLUSSO
LUXURY PLUMBING FIXTURES

Product Parts Breakdown

▲ Specify Finish

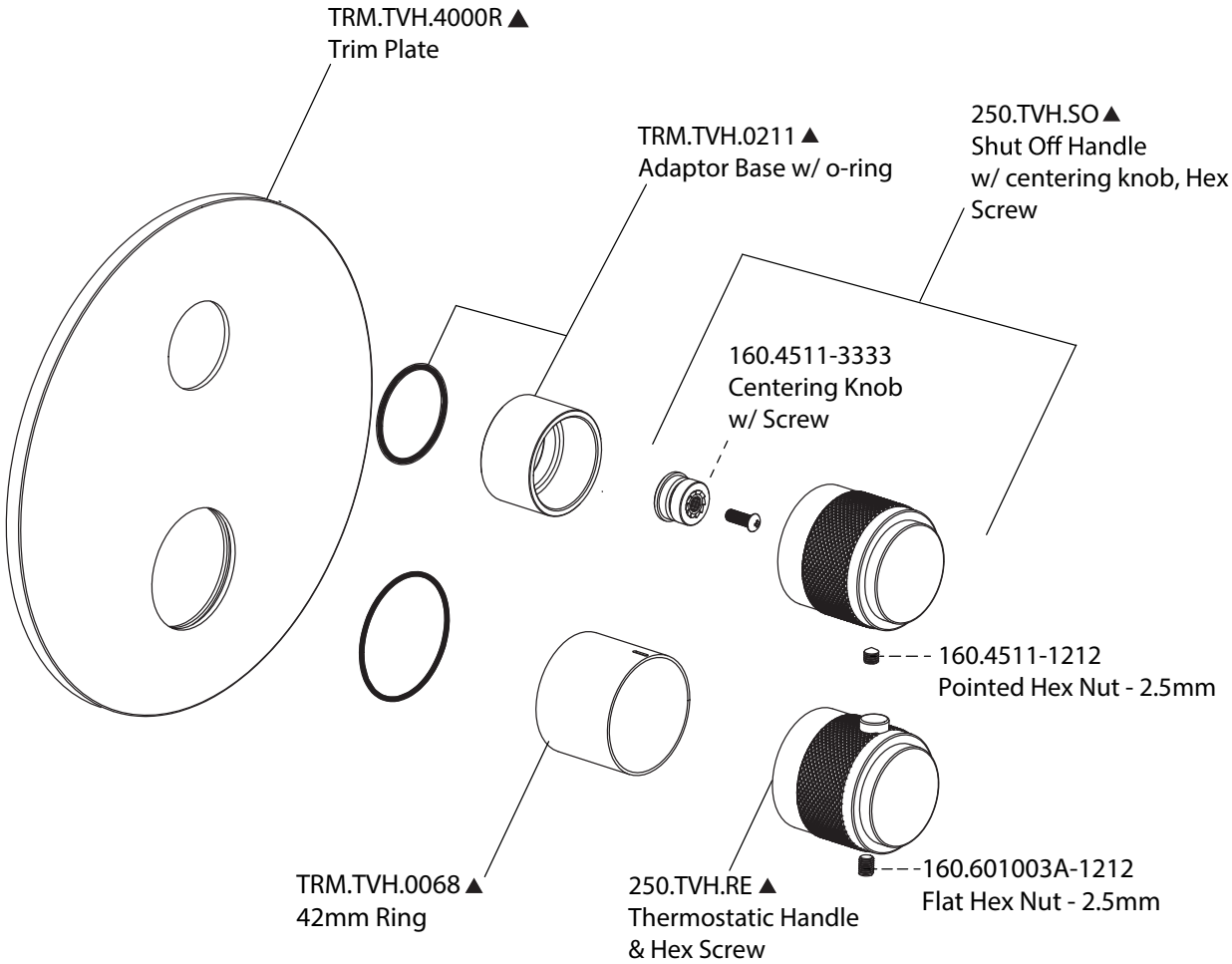

Model No. 250.4000T **Ver** 2.54

FLUSSO
LUXURY PLUMBING FIXTURES

Product Parts Breakdown

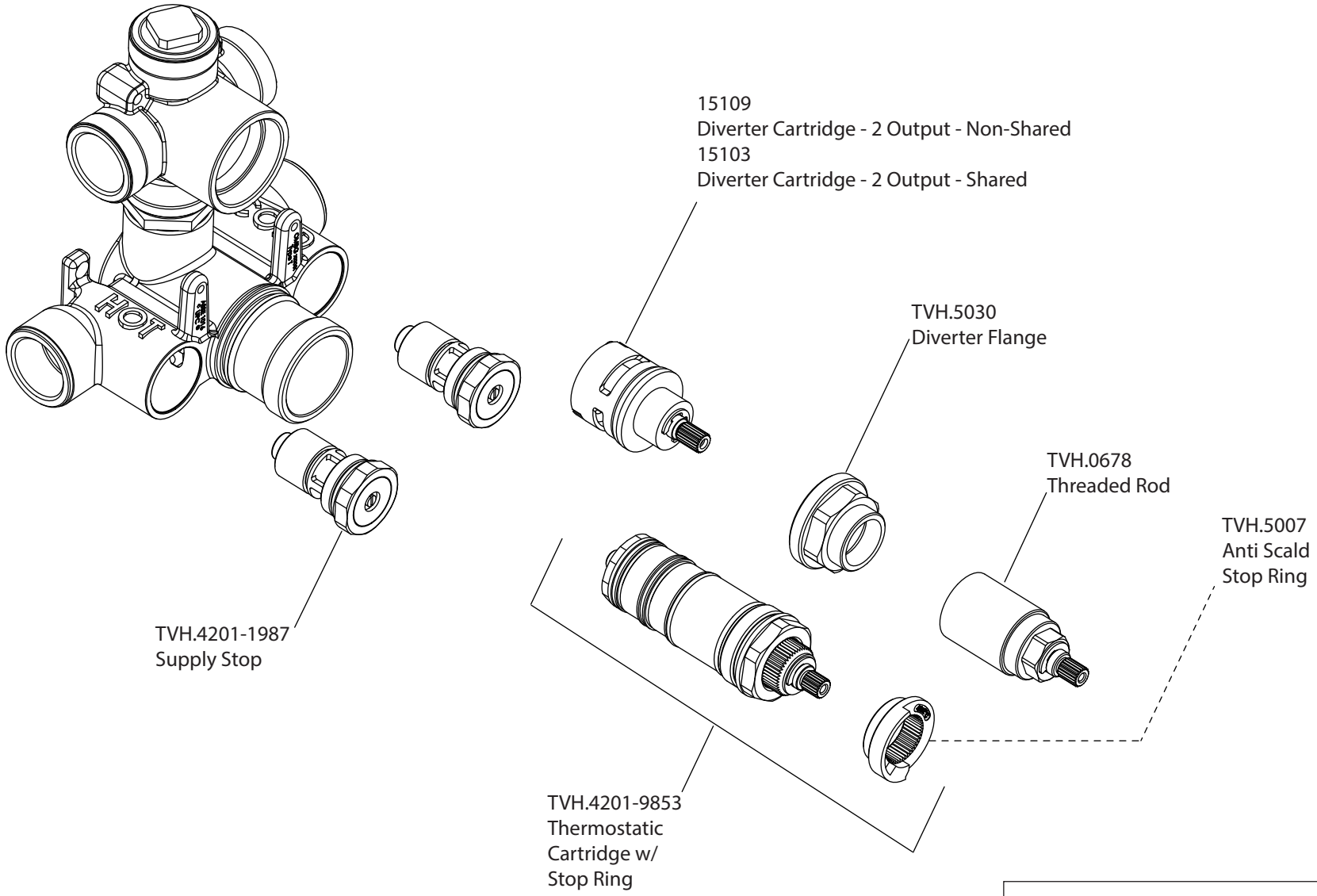

Model No. TVH.4420F **Ver** 2.54

FLUSSO
LUXURY PLUMBING FIXTURES

Product Parts Breakdown

▲ Specify Finish

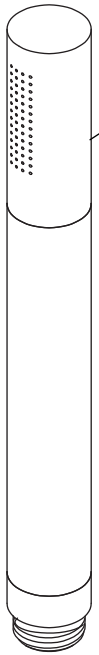

Model No. HS1004H **Ver** 2.55

FLUSSO
LUXURY PLUMBING FIXTURES

Product Parts Breakdown

▲ Specify Finish

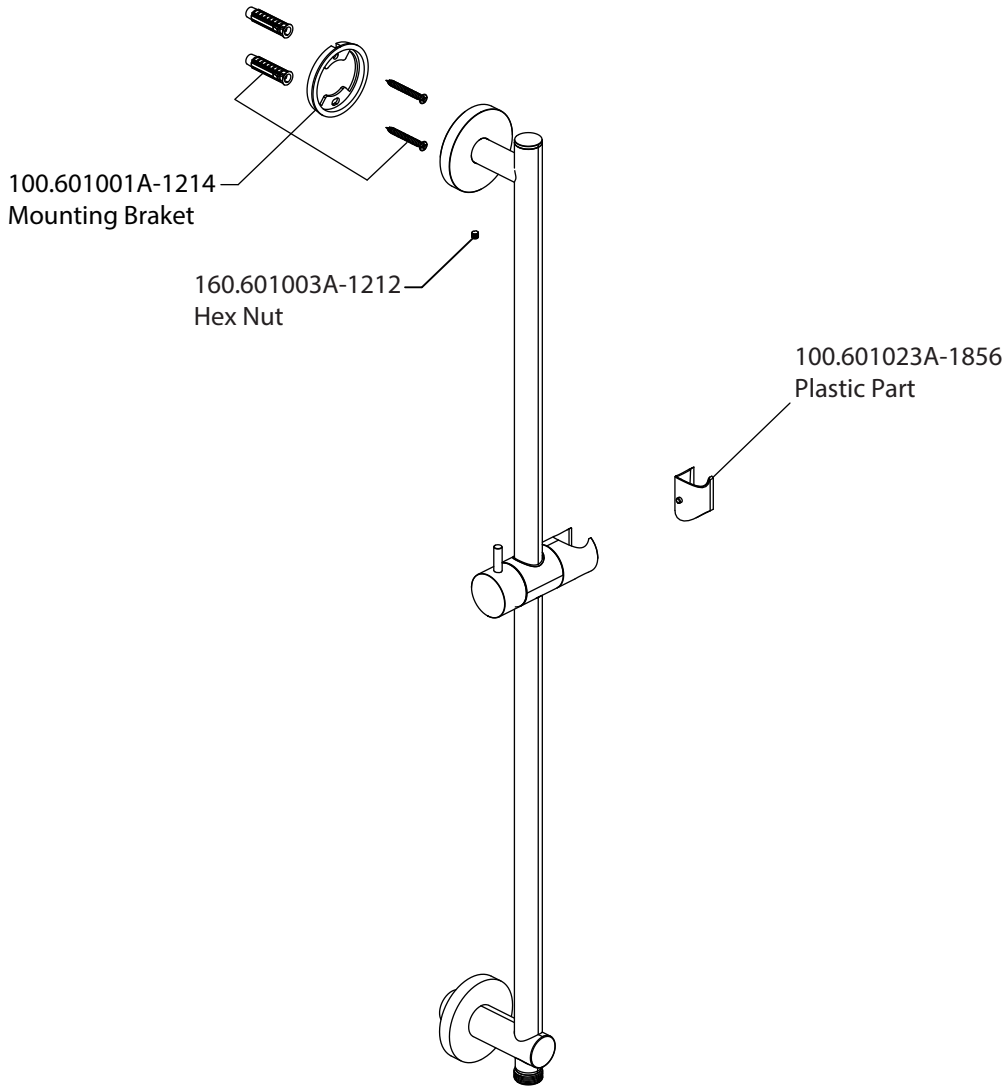

Model No. 100.601023A **Ver** 2.55

FLUSSO
LUXURY PLUMBING FIXTURES

Product Parts Breakdown

▲ Specify Finish

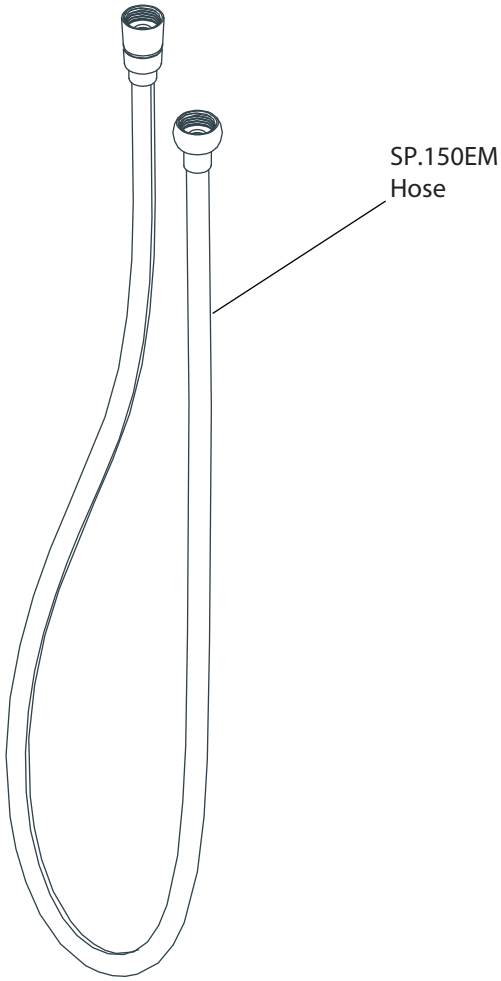

Model No. SP.150EM **Ver** 2.55

FLUSSO
LUXURY PLUMBING FIXTURES