FLUSSO
LUXURY PLUMBING FIXTURES

Serie 250™

250.1001| Brass Bathroom Towel / Robe Hook

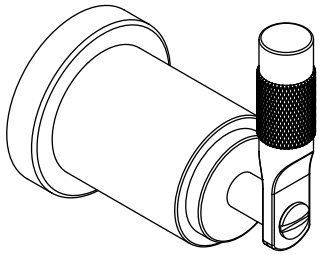

SPECIFICATIONS:

- Solid Brass construction
- Easy Installation

Technical Diagram

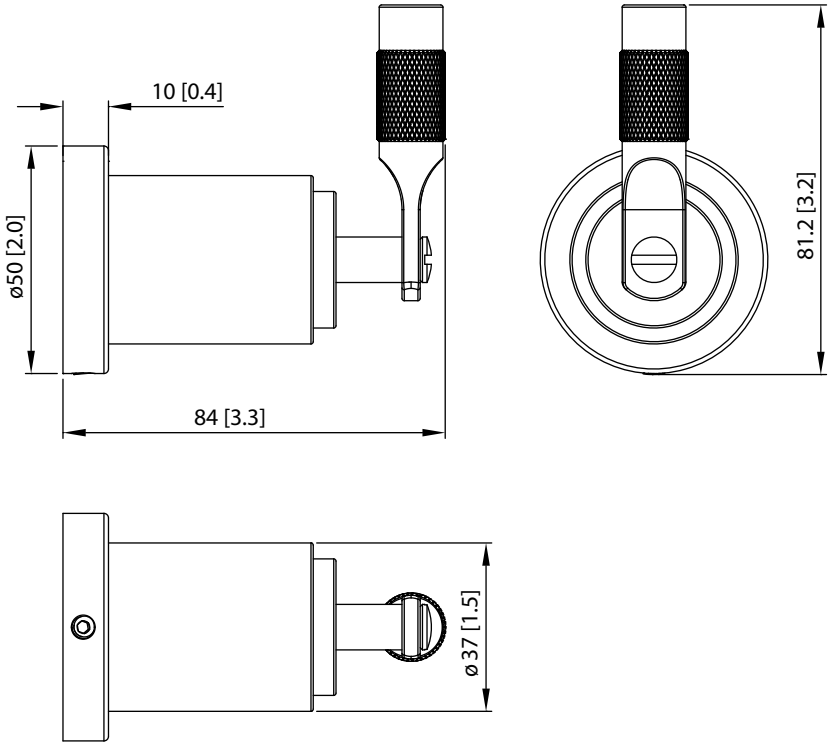

Critical Dimensions in mm [Inches] - Ver 2.54